Zero-g

Tank Plate Welded

General Mixing Applications

Welded flush to the tank bottom for a smooth, clean surface that prevents contamination. Designed to work with Metenova's Zero-g mixers for reliable, hygienic performance in demanding applications.

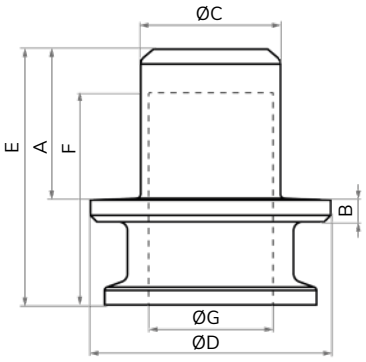

ZG1-ZG2

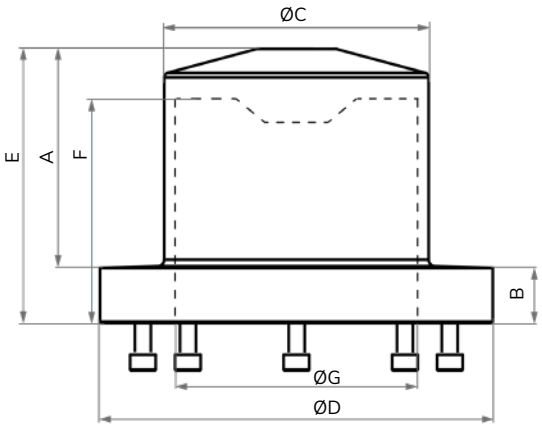

ZG11-ZG12

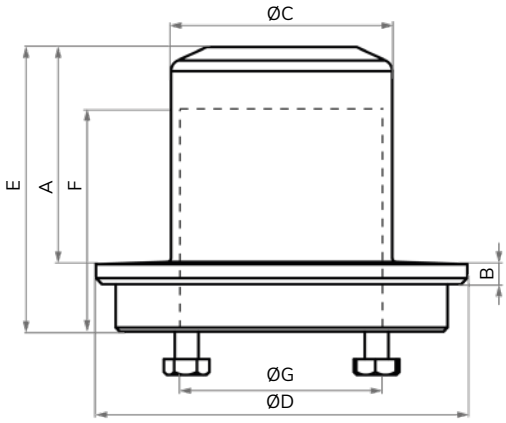

ZG3-ZG10

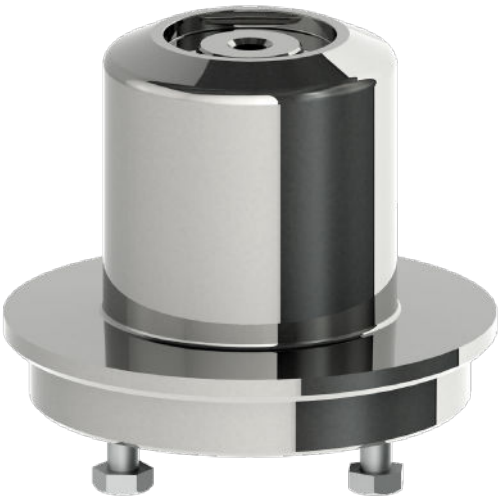

Measurements

Mixer model	Article Number	A mm (in)	B mm (in)	ØC mm (in)	ØD mm (in)	E mm (in)	F mm (in)	ØG mm (in)	Weight kg (lb)
ZG1, ZG2	ZG00506-00838	35 (1.38)	5 (0.20)	32 (1.26)	55 (2.17)	59 (2.32)	48.5 (1.91)	28 (1.10)	0.3 (0.7)
ZG3	ZG12506-00206	45 (1.77)	5 (0.20)	56 (2.20)	94 (3.70)	62 (2.44)	45 (1.77)	51 (2.01)	0.9 (2.0)
ZG5	ZG52506-00079	55 (2.17)	5 (0.20)	56 (2.20)	94 (3.70)	72 (2.83)	55 (2.17)	51 (2.01)	0.9 (2.0)
ZG6	ZG13506-00117	56.5 (2.22)	5 (0.20)	64 (2.52)	104 (4.09)	73.5 (2.89)	56.5 (2.22)	59 (2.32)	1.2 (2.6)
ZG7	ZG23506-00288	60 (2.36)	5 (0.20)	87 (3.43)	129.5 (5.10)	77 (3.03)	57 (2.24)	82 (3.23)	1.6 (3.5)
ZG8	ZG53506-00343	63 (2.48)	5 (0.20)	106 (4.17)	159.5 (6.28)	83 (3.27)	60 (2.36)	101 (3.98)	2.7 (6.0)
ZG9	ZG14506-00504	75 (2.95)	5 (0.20)	146 (5.75)	199.5 (7.85)	95 (3.74)	69 (2.72)	141 (5.55)	4.3 (9.5)
ZG10	ZG24506-00613	80 (3.15)	5 (0.20)	176 (6.93)	229.5 (9.04)	100 (3.94)	69 (2.72)	170 (6.69)	6.2 (13.7)
ZG11	ZG34506-3012081	84 (3.31)	35 (1.38)	168 (6.61)	249.5 (9.82)	119 (4.69)	83 (3.28)	162 (6.38)	11.8 (26.0)
ZG12	ZG64506-06739	139 (5.47)	35 (1.38)	168 (6.61)	249.5 (9.82)	174 (6.85)	147 (5.79)	162 (6.38)	12.7 (28.0)

Metenova® A REPLIGEN® BRAND

Repligen Sweden AB
Norra Ågatan 32
SE-43135 Mölndal, Sweden
Phone +46(0)31 335 95 00
www.metenova.com
info.metenova@repligen.com

General Information

Material	Stainless Steel ASME TP 316L acc. to SA-479 & EN 1.4404 acc. to EN 10272 (Other materials are available upon request)
Inspection Certificate	EN 10204 Type 3.1
Surface Roughness	Ra ≤ 0.38 µm (15 µin)
Surface Treatment	Manually polished. Non animal origin polishing compounds are used.
Operating Temperature	0°C - 150°C (32°F - 302°F)*
Design Pressure	ZG1 – ZG10: -1 – 10 barg (-14.5 – 145 psig); ZG11 – ZG12: -1 – 7 barg (-14.5 – 101.5 psig)
Operating Pressure	-1 – 7 barg (-14.5 – 101.5 psig)
Packing and Marking	Items are individually packed and for traceability purposes marked with item & id no.
Quality Assurance	Metenova Quality Assurance system ensures the quality and traceability at all stages of the process.

*Not for use with frozen media

Product key

Complete item number with add-on
ZGXXXXX-[ ] XXXXX [ ]= 0, A, B, C, D, E

Material Code	**Standard Material**
0	Stainless Steel ASME TP 316L acc. to SA-479 & EN 1.4404 acc. to EN 10272 UNS S31603

	Optional Material* (Add on)
A	Stainless Steel ASME TP 316L acc. to SA-479 UNS S31603; EN 1.4435 acc. to EN 10272 (PED)
B	Stainless Steel 904L/EN 1.4539 ASME SB-649 UNS N08904; EN10272 (PED)
C	Alloy C-22 acc to ASME SB-574 UNS N06022; EN 2.4602 (PED)
D	Alloy C-276 acc to ASME SB-574 UNS N10276; EN 2.4819 (PED)
E	AL-6XN UNS N08367; ASME SB-691; EN 1.4529 (PED)

*Example of materials, other materials available upon request

Metenova®
A REPLIGEN® BRAND

Repligen Sweden AB
Norra Ågatan 32
SE-43135 Mölndal, Sweden
Phone +46(0)31 335 95 00
www.metenova.com
info.metenova@repligen.com

The information in this publication is subject to change without prior notice. The information in this document is believed to be complete and accurate at the time of publication. Repligen assumes no responsibility for any errors that may appear in this document.
Customer is responsible for determining Repligen's product will perform suitable in the intended application.