Zero-g

Magnetic Mixer

The ZG Mixer is the versatile cornerstone of our mixer program — one platform engineered to perform across virtually every stage of your process chain. Its high-efficiency Mix Head delivers powerful yet gentle mixing in a single pass, protecting product integrity without compromising throughput. Built for the most demanding environments, the ZG pairs an exceptional aseptic design and full FDA compliance with an innovative, patented bearing system, making it the confident choice for pharmaceutical and biotechnology production.



Basic Selection

	ZG1	ZG2	ZG3	ZG5	ZG6	ZG7	ZG8	ZG9	ZG10	ZG11	ZG12
Indicative Max Volume [ltr] at 1 cP and General Intensity	10	50	250	850	1 200	2 000	5 000	10 000	20 000	30 000	50 000
Max Speed [rpm]	490	490	490	490	490	490	343	245	245	210*	190*

* Applicable to ZG11 & ZG12: If temperature > 80°C, reduce speed to 50% of max.

The listed indicative maximum mixing capacities apply to 1 cP fluids and provide General mixing intensity. Vigorous mixing is achieved at lower volumes, while Gentle mixing is achieved at volumes above those specified in the table.
To match a mixer to your specific application, contact your local Metenova representative or try our online Mixer Selector (QR-code):

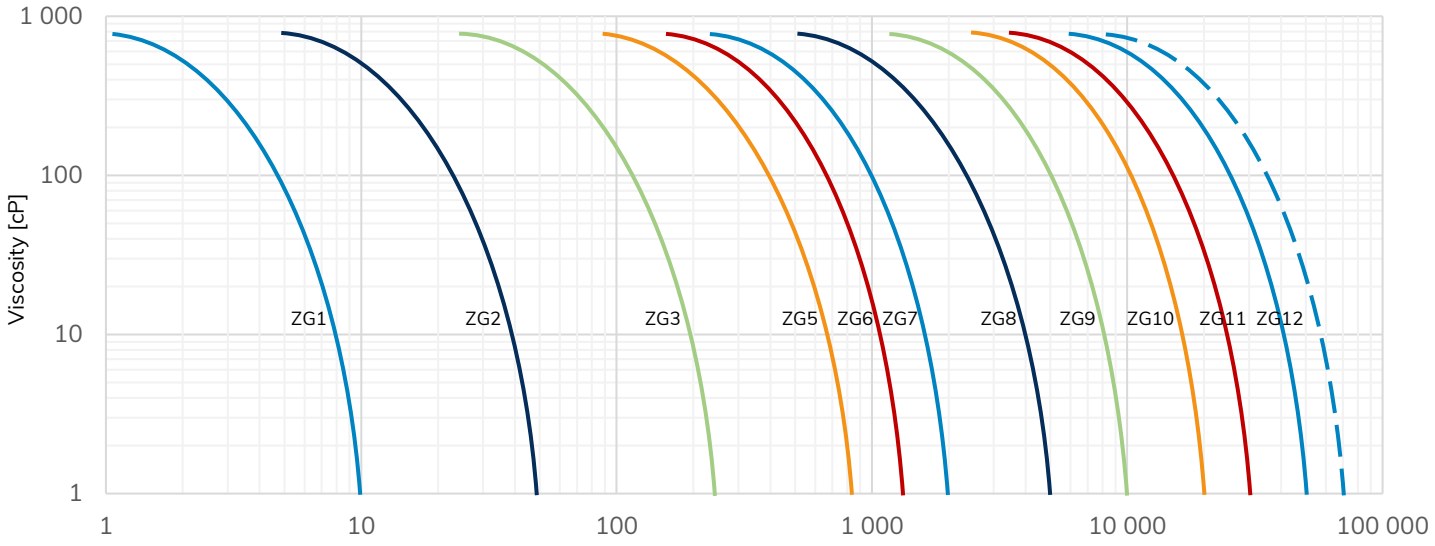

Equivalent working volume [ltr] at General mixing intensity.
The dotted line shows ZG12 enable Gentle mixing up to 70 000 liters.

The information in this publication is subject to change without prior notice. The information in this document is believed to be complete and accurate at the time of publication. Repligen assumes no responsibility for any errors that may appear in this document. Customer is responsible for determining Repligen's product will perform suitable in the intended application

Metenova®
A REPLIGEN® BRAND

Repligen Sweden AB
Norra Ågatan 32
SE-43135 Mölndal, Sweden
Phone +46(0)31 335 95 00
www.metenova.com
info.metenova@repligen.com

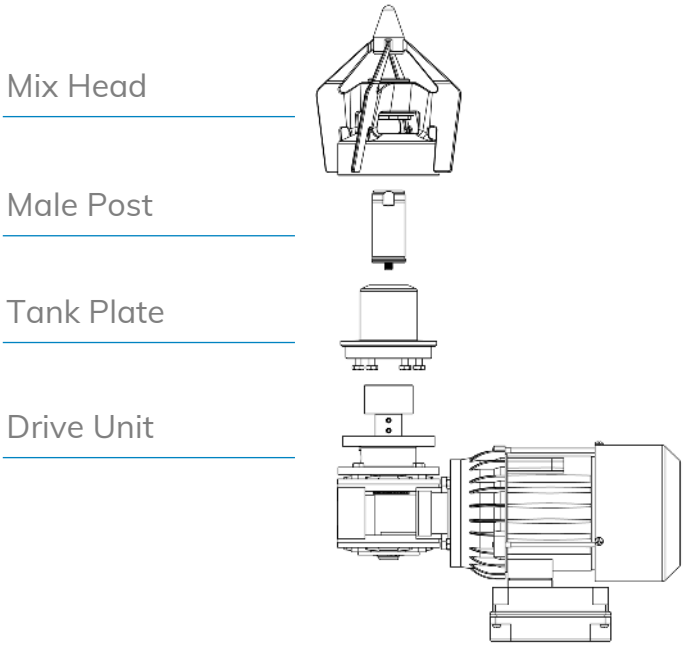

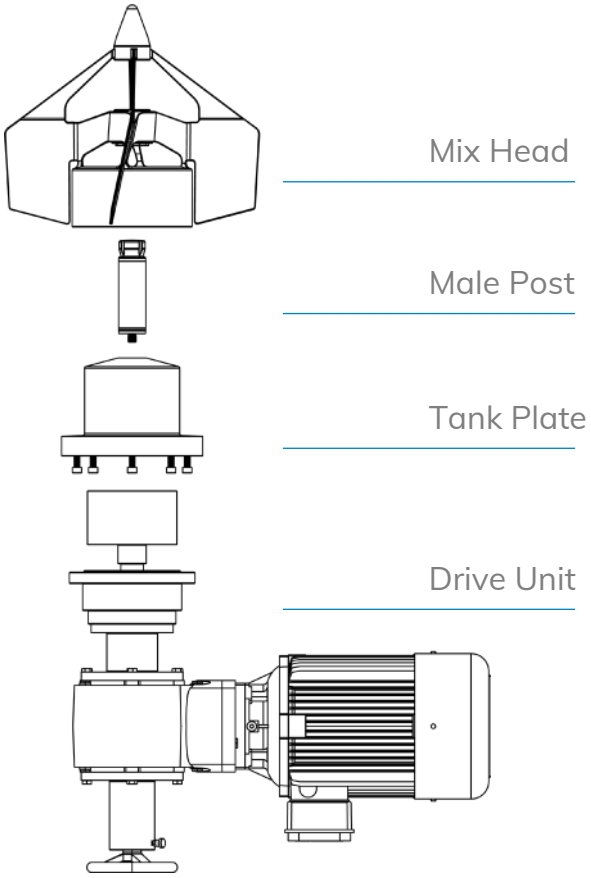

General guide for components detail specification datasheet

(More variation options available for each subcomponent)

Mix Head	***Male Post***	***Tank Plate***	***Drive Unit***
DS-047 ZG Mix Head	DS-045 ZG Male Post	DS-048 ZG Tank Plate	DS-049 ZG Drive Unit AC

Net Weight (approximate)

Mixer Model	ZG1	ZG2	ZG3	ZG5	ZG6	ZG7	ZG8	ZG9	ZG10	ZG11	ZG12
Weight kg (lb)	7 (15)	7 (15)	10 (22)	15 (33)	17 (37)	21 (46)	39 (86)	48 (106)	67 (148)	91 (201)	154 (340)

Additional Information

Operating Temperature	5°C - 150°C (41°F - 302°F)
Environment Temperature	0°C - 40°C (32°F - 104°F)
Operating Pressure	-1 – 7 barg (-14.5 – 101.5 psig)
Surface Roughness	Ra ≤ 0.38 µm (15 µin)
Surface Treatment	Electro polished (Mix Head). Manually polished (other contact parts) Non animal origin polishing compounds are used.
Product Contact Material	As standard, Stainless Steel ASME TP 316L acc. to SA-479 & EN 1.4404 acc. to EN 10272 bearing material SSiC and elastomers EPDM (USP VI , FDA compliant). (Other materials are available upon request)

Metenova®
A REPLIGEN® BRAND

Repligen Sweden AB
Norra Ågatan 32
SE-43135 Mölndal, Sweden
Phone +46(0)31 335 95 00
www.metenova.com
info.metenova@repligen.com

The information in this publication is subject to change without prior notice. The information in this document is believed to be complete and accurate at the time of publication. Repligen assumes no responsibility for any errors that may appear in this document.
Customer is responsible for determining Repligen's product will perform suitable in the intended application.