Zero-g

Drive Unit AC

General Mixing Applications

Zero-g mixers are the base line of Metenova's mixer program. They are very versatile and covers a vast range of applications all through the process chain.

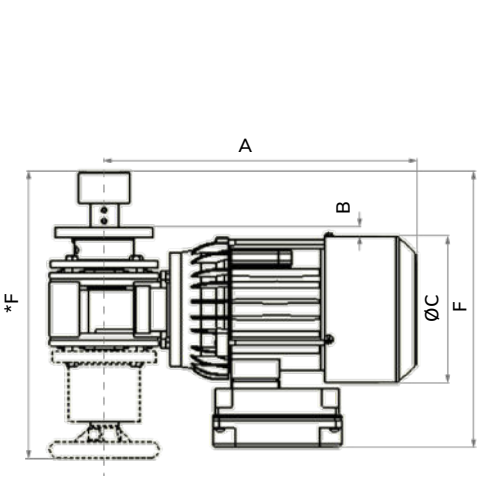

Drive Unit AC E0

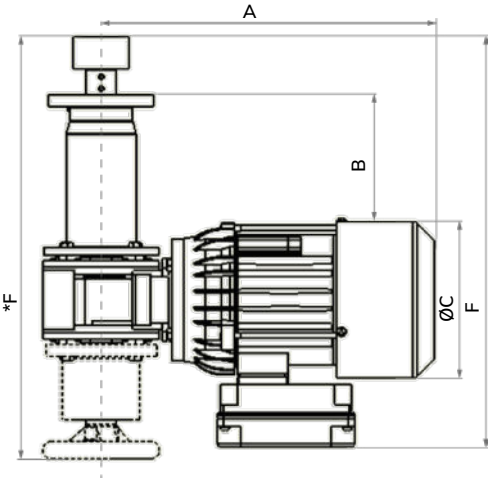

Drive Unit AC E100



General Information

Voltage	Δ230 / Y400 VAC @ 50Hz / Y460 VAC @ 60Hz (±5%)
Thermal Protection	PTC thermistors
Forced Cooling Power Supply	Δ230 VAC
Certified for Incorporation	CE & cULus
Environment Temperature	0°C - 40°C (32°F - 104°F)
Paint	In compliance with FDA
Gear Box Oil	Food grade in compliance with FDA
Cooling Type	TEFC (Totally Enclosed, Fan-Cooled)
Motor support	Due to heavy weight, extra support is necessary for sizes ZG8 and above.
Packing and Marking	Items are individually packed and for traceability purposes marked with item & id no.
Quality Assurance	Metenova Quality Assurance system ensures the quality and traceability at all stages of the process.

Product Key

Complete Item Number with Versions

			Versions			
			F	**I**	**D**	**N**
ZGXXXXX-[ ]XXXXX	[ ] = F, I, D, N	*Efficiency Performance Class*	IE3	IE3	IE3	IE3
		Protection Class	IP55	IP54	IP66	IP66
		Forced Cooling	-	Yes	-	Yes

Metenova® A REPLIGEN® BRAND

Repligen Sweden AB
Norra Ågatan 32
SE-43135 Mölndal, Sweden
Phone +46(0)31 335 95 00
www.metenova.com
info.metenova@repligen.com

Measurements IP54/IP55

Mixer Model		Article Number	A mm (in)	B mm (in)	ØC mm (in)	F mm (in)	Weight kg (lb)	With Lowering Device	
								*F mm (in)	**Weight kg (lb)
ZG1, ZG2	E0	ZG51502-F00875	231 (9.07)	3 (0.1)	110 (4.33)	219 (8.62)	5.2 (11.55)	269 (10.59)	6.6 (14.48)
ZG1, ZG2	E100	ZG51502-F00980	231 (9.07)	103 (4.1)	110 (4.33)	319 (12.56)	5.8 (12.85)	350 (13.78)	7.4 (16.38)
ZG1, ZG2 Flanged, Dished End	E0	ZG51502-F02542	231 (9.07)	3 (0.1)	110 (4.33)	239 (9.39)	5.2 (11.55)	-	-
ZG3	E0	ZG12502-F00441	244 (9.61)	5 (0.2)	120 (4.72)	227 (8.94)	6.2 (13.76)	252 (9.92)	7.6 (16.80)
ZG3	E0	ZG12502-I00441	297 (11.69)	5 (0.2)	120 (4.72)	227 (8.94)	6.8 (15.08)	252 (9.92)	8.2 (18.12)
ZG3	E100	ZG12502-F00427	244 (9.61)	105 (4.1)	120 (4.72)	327 (12.85)	6.9 (15.30)	352 (13.88)	8.4 (18.41)
ZG3	E100	ZG12502-I00427	297 (11.69)	105 (4.1)	120 (4.72)	327 (12.85)	7.5 (16.62)	352 (13.88)	9.0 (19.73)
ZG5	E0	ZG52502-F00442	286 (11.26)	5 (0.2)	134 (5.28)	251 (9.88)	9.9 (21.91)	261 (10.28)	11.1 (24.36)
ZG5	E0	ZG52502-I00442	326 (12.83)	5 (0.2)	134 (5.28)	251 (9.88)	10.5 (23.24)	261 (10.28)	11.7 (25.68)
ZG5	E100	ZG52502-F00428	286 (11.26)	105 (4.1)	134 (5.28)	351 (13.82)	11.5 (25.26)	361 (14.23)	12.6 (27.87)
ZG5	E100	ZG52502-I00428	326 (12.83)	105 (4.1)	134 (5.28)	351 (13.82)	12.1 (26.59)	361 (14.23)	13.2 (29.19)
ZG6	E0	ZG13502-F00443	304 (11.97)	3 (0.1)	134 (5.28)	249 (9.80)	11.5 (25.38)	260 (10.24)	12.6 (27.80)
ZG6	E0	ZG13502-I00443	344 (13.54)	3 (0.1)	134 (5.28)	249 (9.80)	12.1 (26.70)	260 (10.24)	13.2 (29.12)
ZG6	E100	ZG13502-F00429	304 (11.97)	103 (4.1)	134 (5.28)	349 (13.76)	13.2 (29.10)	360 (14.17)	14.4 (31.68)
ZG6	E100	ZG13502-I00429	344 (13.54)	103 (4.1)	134 (5.28)	349 (13.76)	13.8 (30.42)	360 (14.17)	15.0 (33.00)
ZG7	E0	ZG23502-F00444	320 (12.61)	21 (0.8)	150 (5.91)	282 (11.10)	15.3 (33.82)	314 (12.36)	17.8 (39.24)
ZG7	E0	ZG23502-I00444	386 (15.21)	21 (0.8)	150 (5.91)	282 (11.10)	15.9 (35.14)	314 (12.36)	18.4 (40.57)
ZG7	E100	ZG23502-F00430	320 (12.61)	121 (4.8)	150 (5.91)	382 (15.06)	16.9 (37.21)	414 (16.30)	19.4 (42.86)
ZG7	E100	ZG23502-I00430	386 (15.21)	121 (4.8)	150 (5.91)	382 (15.06)	17.5 (38.54)	414 (16.30)	20.0 (44.18)
ZG8	E0	ZG53502-F00445	374 (14.72)	26 (1.0)	194 (7.64)	319 (12.56)	29.1 (64.22)	344 (13.54)	31.7 (69.86)
ZG8	E0	ZG53502-I00445	443 (17.44)	26 (1.0)	194 (7.64)	319 (12.56)	29.7 (65.54)	344 (13.54)	32.3 (71.19)
ZG8	E100	ZG53502-F00431	374 (14.72)	126 (5.0)	194 (7.64)	419 (16.50)	31.9 (70.31)	444 (17.50)	34.4 (75.88)
ZG8	E100	ZG53502-I00431	443 (17.44)	126 (5.0)	194 (7.64)	419 (16.50)	32.5 (71.63)	444 (17.50)	35.0 (77.21)
ZG9	E0	ZG14502-F00446	399 (15.71)	26 (1.0)	194 (7.64)	329 (12.95)	35.5 (78.24)	354 (13.94)	38.0 (83.78)
ZG9	E0	ZG14502-I00446	445 (17.52)	26 (1.0)	194 (7.64)	329 (12.95)	36.1 (79.56)	354 (13.94)	38.6 (85.10)
ZG9	E100	ZG14502-F00432	399 (15.71)	126 (5.0)	194 (7.64)	429 (16.89)	38.3 (84.33)	454 (17.89)	40.8 (89.90)
ZG9	E100	ZG14502-I00432	445 (17.52)	126 (5.0)	194 (7.64)	429 (16.89)	38.9 (85.65)	454 (17.89)	41.4 (91.23)
ZG10	E0	ZG24502-F00447	474 (18.64)	16 (0.6)	210 (8.27)	338 (13.31)	50.7 (111.71)	353 (13.90)	52.3 (115.19)
ZG10	E0	ZG24502-I00447	496 (19.51)	16 (0.6)	210 (8.27)	338 (13.31)	51.3 (113.03)	353 (13.90)	52.9 (116.51)
ZG10	E100	ZG24502-F00433	474 (18.64)	116 (4.6)	210 (8.27)	438 (17.24)	54.2 (119.45)	453 (17.83)	55.8 (122.95)
ZG10	E100	ZG24502-I00433	496 (19.51)	116 (4.6)	210 (8.27)	438 (17.24)	54.8 (120.77)	453 (17.83)	56.4 (124.27)
ZG11	E100	ZG34502-F3012096	474 (18.64)	116 (4.6)	210 (8.27)	460 (18.11)	65.7 (144.80)	476 (18.74)	70.7 (155.90)
ZG11	E100	ZG34502-I3012096	496 (19.51)	116 (4.6)	210 (8.27)	460 (18.11)	66.3 (146.17)	476 (18.74)	71.3 (157.19)

*F = F measurement with lowering device (Add-on option 3, see separate article number on page 4)
**Weight = Weight with lowering device

Metenova®
A REPLIGEN® BRAND

Repligen Sweden AB
Norra Ågatan 32
SE-43135 Mölndal, Sweden
Phone +46(0)31 335 95 00
www.metenova.com
info.metenova@repligen.com

Measurements IP66

Mixer Model	Article Number	A mm (in)	B mm (in)	ØC mm (in)	F mm (in)	Weight kg (lb)	With Lowering Device	
							*F mm (in)	**Weight kg (lb)
ZG1, ZG2 E0	ZG51502-D00875	231 (9.07)	3 (0.1)	110 (4.33)	219 (8.62)	5.2 (11.55)	269 (10.59)	6.6 (14.48)
ZG1, ZG2 E100	ZG51502-D00980	231 (9.07)	103 (4.1)	110 (4.33)	319 (12.56)	5.8 (12.85)	350 (13.78)	7.4 (16.38)
ZG1, ZG2 E0 Flanged, Dished End	ZG51502-D02542	231 (9.07)	3 (0.1)	110 (4.33)	239 (9.39)	5.2 (11.55)	-	-
ZG3 E0	ZG12502-D00441	244 (9.61)	5 (0.2)	120 (4.72)	227 (8.94)	6.2 (13.76)	252 (9.92)	7.6 (16.80)
ZG3 E0	ZG12502-N00441	349 (13.74)	5 (0.2)	120 (4.72)	227 (8.94)	8.9 (19.71)	252 (9.92)	10.3 (22.75)
ZG3 E100	ZG12502-D00427	244 (9.61)	105 (4.1)	120 (4.72)	327 (12.85)	6.9 (15.30)	352 (13.88)	8.4 (18.41)
ZG3 E100	ZG12502-N00427	349 (13.74)	105 (4.1)	120 (4.72)	327 (12.85)	9.6 (21.25)	352 (13.88)	11.1 (24.36)
ZG5 E0	ZG52502-D00442	286 (11.26)	5 (0.2)	134 (5.28)	251 (9.88)	9.9 (21.91)	261 (10.28)	11.1 (24.36)
ZG5 E0	ZG52502-N00442	388 (15.28)	5 (0.2)	134 (5.28)	251 (9.88)	12.9 (28.53)	261 (10.28)	14.1 (30.97)
ZG5 E100	ZG52502-D00428	286 (11.26)	105 (4.1)	134 (5.28)	351 (13.82)	11.5 (25.26)	361 (14.23)	12.6 (27.87)
ZG5 E100	ZG52502-N00428	388 (15.28)	105 (4.1)	134 (5.28)	351 (13.82)	14.5 (31.88)	361 (14.23)	15.6 (34.48)
ZG6 E0	ZG13502-D00443	304 (11.97)	3 (0.1)	134 (5.28)	249 (9.80)	11.5 (25.38)	260 (10.24)	12.6 (27.80)
ZG6 E0	ZG13502-N00443	406 (15.98)	3 (0.1)	134 (5.28)	249 (9.80)	14.5 (31.99)	260 (10.24)	15.6 (34.41)
ZG6 E100	ZG13502-D00429	304 (11.97)	103 (4.1)	134 (5.28)	349 (13.76)	13.2 (29.10)	360 (14.17)	14.4 (31.68)
ZG6 E100	ZG13502-N00429	406 (15.98)	103 (4.1)	134 (5.28)	349 (13.76)	16.2 (35.71)	360 (14.17)	17.4 (38.29)
ZG7 E0	ZG23502-D00444	320 (12.61)	21 (0.8)	150 (5.91)	282 (11.10)	15.3 (33.82)	314 (12.36)	17.8 (39.24)
ZG7 E0	ZG23502-N00444	421 (16.59)	21 (0.8)	150 (5.91)	282 (11.10)	18.5 (40.87)	314 (12.36)	21.0 (46.30)
ZG7 E100	ZG23502-D00430	320 (12.61)	121 (4.8)	150 (5.91)	382 (15.06)	16.9 (37.21)	414 (16.30)	19.4 (42.86)
ZG7 E100	ZG23502-N00430	421 (16.59)	121 (4.8)	150 (5.91)	382 (15.06)	20.1 (44.27)	414 (16.30)	22.6 (49.91)
ZG8 E0	ZG53502-D00445	374 (14.72)	26 (1.0)	194 (7.64)	319 (12.56)	29.1 (64.22)	344 (13.54)	31.7 (69.86)
ZG8 E0	ZG53502-N00445	488 (19.21)	26 (1.0)	194 (7.64)	319 (12.56)	32.6 (71.94)	344 (13.54)	35.2 (77.58)
ZG8 E100	ZG53502-D00431	374 (14.72)	126 (5.0)	194 (7.64)	419 (16.50)	31.9 (70.31)	444 (17.50)	34.4 (75.88)
ZG8 E100	ZG53502-N00431	488 (19.21)	126 (5.0)	194 (7.64)	419 (16.50)	35.4 (78.02)	444 (17.50)	37.9 (83.60)
ZG9 E0	ZG14502-D00446	399 (15.71)	26 (1.0)	194 (7.64)	329 (12.95)	35.5 (78.24)	354 (13.94)	38.0 (83.78)
ZG9 E0	ZG14502-N00446	490 (19.29)	26 (1.0)	194 (7.64)	329 (12.95)	39.0 (85.96)	354 (13.94)	41.5 (91.49)
ZG9 E100	ZG14502-D00432	399 (15.71)	126 (5.0)	194 (7.64)	429 (16.89)	38.3 (84.33)	454 (17.89)	40.8 (89.90)
ZG9 E100	ZG14502-N00432	490 (19.29)	126 (5.0)	194 (7.64)	429 (16.89)	41.8 (92.04)	454 (17.89)	44.3 (97.62)
ZG10 E0	ZG24502-D00447	474 (18.64)	16 (0.6)	210 (8.27)	338 (13.31)	50.7 (111.71)	353 (13.90)	52.3 (115.19)
ZG10 E0	ZG24502-N00447	545 (21.44)	16 (0.6)	210 (8.27)	338 (13.31)	54.4 (119.87)	353 (13.90)	56.0 (123.35)
ZG10 E100	ZG24502-D00433	474 (18.64)	116 (4.6)	210 (8.27)	438 (17.24)	54.2 (119.45)	453 (17.83)	55.8 (122.95)
ZG10 E100	ZG24502-N00433	545 (21.44)	116 (4.6)	210 (8.27)	438 (17.24)	57.9 (127.60)	453 (17.83)	59.5 (131.11)
ZG11 E100	ZG34502-D3012096	474 (18.64)	116 (4.6)	210 (8.27)	460 (18.11)	65.7 (144.80)	476 (18.74)	70.7 (155.90)
ZG11 E100	ZG34502-N3012096	545 (21.44)	116 (4.6)	210 (8.27)	460 (18.11)	69.4 (153.0)	476 (18.74)	74.4 (164.0)
ZG12 E100	ZG64502-D08004	635 (25.0)	290 (11.4)	258 (10.2)	N/A	N/A	676 (26.6)***	118.5 (261.2)***

*F = F measurement with lowering device (Add-on option 3, see separate article number on page 4)
**Weight = Weight with lowering device
*** With lowering device is standard option for ZG12

Metenova®
A REPLIGEN® BRAND

Repligen Sweden AB
Norra Ågatan 32
SE-43135 Mölndal, Sweden
Phone +46(0)31 335 95 00
www.metenova.com
info.metenova@repligen.com

Options

Option 1



Option 2



Option 3



Option 4



Mixer Model	RPM Sensor, Mix Head	RPM Sensor, Shaft		Lowering Device		Transport Locking Device
	E0 & E100	E0	E100	E0*	E100	E0 & E100
ZG1,ZG2	-	ZG00014-03193	ZG00014-03193	ZG51502-04147	ZG51502-04148	ZG00016-01773
ZG3	ZG00014-03083	ZG00014-03193	ZG00014-03193	ZG12502-03638	ZG12502-03639	ZG12016-01775
ZG5	ZG00014-03083	ZG00014-03193	ZG00014-03193	ZG52502-02000	ZG52502-02001	ZG52016-01776
ZG6	ZG00014-03083	ZG00014-03193	ZG00014-03193	ZG13502-02002	ZG13502-02003	ZG13016-01777
ZG7	ZG00014-03083	ZG00014-03193	ZG00014-03193	ZG23502-02006	ZG23502-02007	ZG23016-02721
ZG8	ZG00014-03083	-	ZG00014-03193	ZG53502-02008	ZG53502-02009	-
ZG9	ZG00014-03083	-	ZG00014-03193	ZG14502-02010	ZG14502-02011	-
ZG10	ZG00014-03083	-	ZG00014-03193	ZG24502-02012	ZG24502-02013	-
ZG11	ZG00014-03083	-	ZG00014-03193	-	ZG34502-3012097	-
ZG12	ZG00014-03083	-	ZG00014-03193	-	ZG64502-08004**	-

*Not possible to combine with RPM Sensor, Shaft
** Standard Option for ZG12

RPM Sensor

Article Number	ZG00014-03083	ZG00014-03193
Type	RPM Sensor, Mix Head	RPM Sensor, Shaft
Pulses/Turn	1	4
Output Function	3-wire, NO contact PNP	4-wire, NO/NC contact PNP
Indicator	Yellow LED	Yellow LED
Temperatur Range	-25°C - 70°C (-13°F - 158°F)	-25°C - 70°C (-13°F - 158°F)
Operations Voltage	10...65 VDC	10...30 VDC
Protection Class	IP67	IP67

Product Specific Information IP54/IP55 and IP66

Mixer Model	Motor	Poles	Gear Box	Current	Min-Max rpm for Mixer
ZG1, ZG2	0.12 kW/ 0.17 hp @ 50Hz 0.14 kW/ 0.19 hp @ 60Hz	2-pole	7:1	0.65A @ 230V/50Hz – 0.38A @ 400V/50Hz – 0.38A @ 460V/60Hz	50* - 490
ZG3	0.25 kW/ 0.33 hp @ 50 Hz 0.29 kW/ 0.38 hp @ 60 Hz	2-pole	7:1	1.10A @ 230V/50Hz – 0.65A @ 400V/50Hz – 0.65A @ 460V/60Hz	50* - 490
ZG5	0.37 kW/ 0.50 hp @ 50 Hz 0.43 kW/ 0.57 hp @ 60 Hz	2-pole	7:1	1.65A @ 230V/50Hz – 0.95A @ 400V/50Hz – 0.95A @ 460V/60Hz	50* - 490
ZG6	0.55 kW/ 0.75 hp @ 50 Hz 0.64 kW/ 0.86 hp @ 60 Hz	2-pole	7:1	2.15A @ 230V/50Hz – 1.25A @ 400V/50Hz – 1.25A @ 460V/60H	50* - 490
ZG7	0.75 kW/ 1.0 hp @ 50 Hz 0.87 kW/ 1.17 hp @ 60 Hz	2-pole	7:1	2.95A @ 230V/50Hz – 1.70A @ 400V/50Hz – 1.70A @ 460V/60Hz	50* - 490
ZG8	2.2 kW/ 2.95 hp @ 50 Hz 2.5 kW/ 3.35 hp @ 60 Hz	2-pole	10:1	7.5A @ 230V/50Hz – 4.3A @ 400V/50Hz – 4.1A @ 460V/60Hz	34* - 343
ZG9	1.5 kW/ 2.0 hp @ 50 Hz 1.7 kW/ 2.3 hp @ 60 Hz	4-pole	7:1	5.7A @ 230V/50Hz – 3.3A @ 400V/50Hz – 3.2A @ 460V/60Hz	24* - 245
ZG10	3.0 kW/ 4.0 hp @ 50 Hz 3.6 kW/ 4.8 hp @ 60 Hz	4-pole	7:1	10.9A @ 230V/50Hz – 6.3A @ 400V/50Hz – 6.3A @ 460V/60Hz	24* – 245
ZG11	3.0 kW/ 4.0 hp @ 50 Hz 3.6 kW/ 4.8 hp @ 60 Hz	4-pole	7:1	10.9A @ 230V/50Hz – 6.3A @ 400V/50Hz – 6.3A @ 460V/60Hz	24* – 210
ZG12	5.5 kW/ 7.3 hp @ 50 Hz 5.5 kW/ 7.3 hp @ 60 Hz 5.5 kW/ 7.3 hp @ 60 Hz	4-pole	8,33:1	10.9A @ 400V/50Hz 9.75A @ 460V/60Hz 9.84V @ 480V/60Hz	19* - 190

* Minimum speed is based on 10% of the maximum speed of the motor at approximately 60Hz. If a lower speed is required, an electrical forced cooling must be installed.

Metenova®
A REPLIGEN® BRAND

Repligen Sweden AB
Norra Ågatan 32
SE-43135 Mölndal, Sweden
Phone +46(0)31 335 95 00
www.metenova.com
info.metenova@repligen.com

The information in this publication is subject to change without prior notice. The information in this document is believed to be complete and accurate at the time of publication. Repligen assumes no responsibility for any errors that may appear in this document. Customer is responsible for determining Repligen's product will perform suitable in the intended application.