Zero-g

Male Post

General Mixing Applications

Aseptic design with a level, easy-to-clean surface for hygienic operation. Available in multiple sizes for seamless integration.

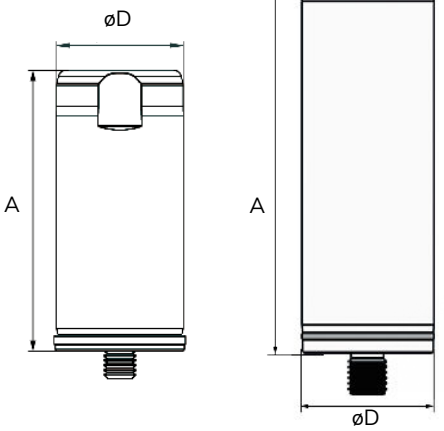

ZG11, ZG12, ZGB2



Male Post
Repeller Top 48 mm



Male Post
18, 32, 40 mm



Male Post
Ceramic part 48 mm

Measurements

Size	*Article Number*	*A mm (in)*	*ØD mm (in)*	*Suitable for*
Male Post 18 mm	ZG00507-00827	40.0 (1.57)	18 (0.71)	ZG1, ZG2, ZG2P, HP2 & HS2
Male Post 32 mm	ZG00507-00199	70.5 (2.78)	32 (1.26)	ZG3, ZG5, ZG6, ZG7, ZG5P, ZG7P, HP5 & HS5
Male Post 40 mm	ZG00507-00329	75.5 (2.97)	40 (1.57)	ZG8, ZG9, ZG10, ZGB1, HP8 & HS8
Male Post Ceramic part 48 mm	ZG00507-A3013215	165.8 (6.53)	48 (1.89)	ZG11, ZG12, ZGB2
Male Post Repeller Top 48 mm				

General Information

Material in Media Contact	Silicon Carbide (SSiC); FDA CFR21 & USP class VI Male Post Repeller Top – Stainless Steel ASME TP 316L acc.to SA-479 & EN 1.4435 acc. to EN 10272*
O-rings	EPDM; FDA CFR21 §177.2600 & USP class VI
Surface Roughness	Ra ≤ 0.38 µm (15 µin)
Operating Temperature	0°C - 150°C (32°F - 302°F)
pH Range	1 – 14 (SSiC)
Design Pressure	-1 – 7 barg (-14.5 – 101.5 psig)
Packing and Marking	Items are individually packed and for traceability purposes marked with item & id no.
Quality Assurance	Metenova Quality Assurance system ensures the quality and traceability at all stages of the process.

* Other materials available upon request

Metenova®
A REPLIGEN® BRAND

Repligen Sweden AB
Norra Ågatan 32
SE-43135 Mölndal, Sweden
Phone +46(0)31 335 95 00
www.metenova.com
info.metenova@repligen.com

Options

Article Number	ZG00507-00827	ZG00507-00199	ZG00507-00329	ZG00507-A3013215
Product	Male Post 18 mm	Male Post 32 mm	Male Post 40 mm	Male Post 48 mm
Option 1 Silicone Platinum Cured O-rings in lieu of EPDM	ZG00013-04170	ZG00013-04171	ZG00013-04172	*
Option 2 Viton O-rings in lieu of EPDM	ZG00013-03127	ZG00013-03128	ZG00013-03129	*
Option 3 Kalrez O-rings in lieu of EPDM	ZG00013-03133	ZG00013-03134	ZG00013-03135	*

* Available upon request

Tools specification datasheet

Lifting Tool	*Tightening Tool*
DS-022	DS-022

Metenova®
A REPLIGEN® BRAND

Repligen Sweden AB
Norra Ågatan 32
SE-43135 Mölndal, Sweden
Phone +46(0)31 335 95 00
www.metenova.com
info.metenova@repligen.com

The information in this publication is subject to change without prior notice. The information in this document is believed to be complete and accurate at the time of publication. Repligen assumes no responsibility for any errors that may appear in this document.
Customer is responsible for determining Repligen's product will perform suitable in the intended application.