Zero-g Technology Upgrade

Questionnaire Steridose

General Mixing Applications

To ensure the best possible support for your new product and to avoid any miscommunication, we kindly ask you to complete the information in this document. This will help ensure that the delivery fully meets your requirements.

Date	
Company (Name)	
Contact (Name)	
Email address	

Current brand		
Model and size		
Manufacturing year		
Standard Mix Head or customized		
Speed range during production		
ATEX	Yes ☐ Category/ Zone:	No ☐

Replaceable components:

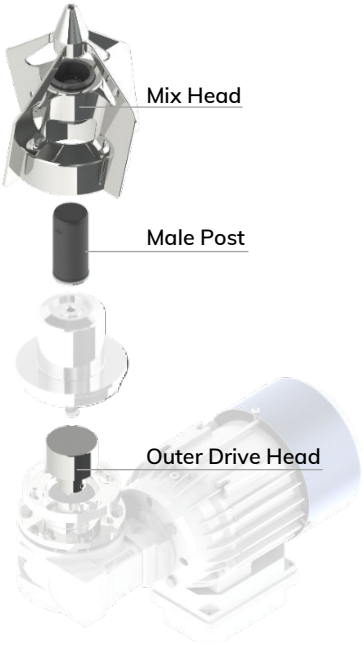

Media

Density (kg/m³)	
Viscosity (Min – Max, cP)	
Product	

Mix Head (Type and measurements)

SMA ☐ **SMO** ☐

Max Speed (rpm)	
Measurement (øA)	
Measurement (øB)	
Measurement (C)	

SMA

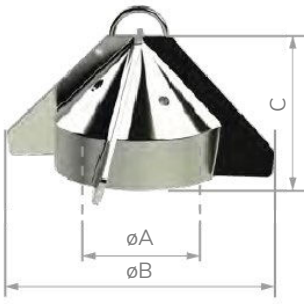

SMO

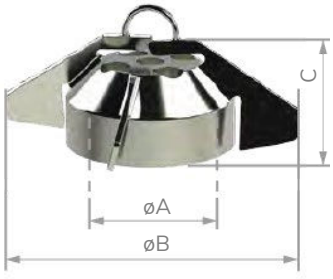

Metenova®
A REPLIGEN® BRAND

Repligen Sweden AB
Norra Ågatan 32
SE-43135 Mölndal, Sweden
Phone +46(0)31 335 95 00
www.metenova.com
info.metenova@repligen.com

Drive Unit

Motor (type) kW & Speed	
RPM Sensor (type)	
Measurement ODH (A)	
Measurement ODH (øB)	
Measurement ODH (C)	
Measurement ODH (øD)	
Measurement ODH (øE)	
Measurement ODH (øF)	
Measurement ODH (øG)	
Measurement ODH (øH)	
Measurement ODH (l)	

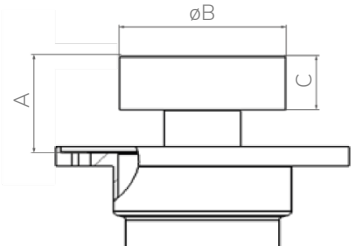

Existing Outer Drive Head

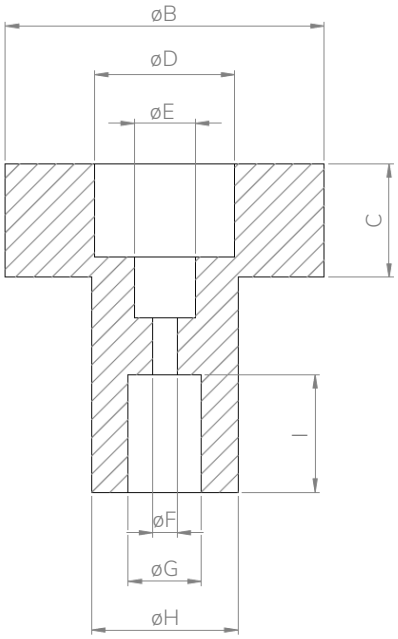

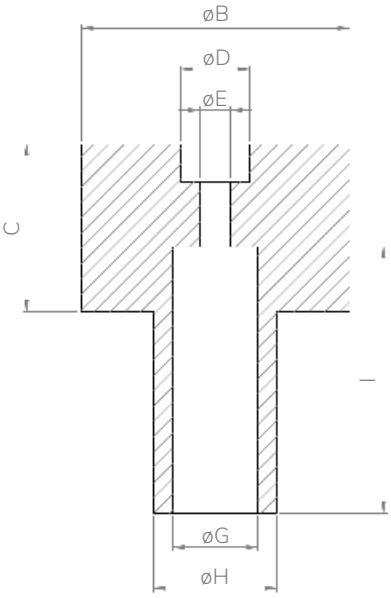

Tank Plate

Tankplate (type)	
Welded or flanged	
Flange (type)	
Measurement (A)	
Measurement (øB)	
Measurement (øC)	

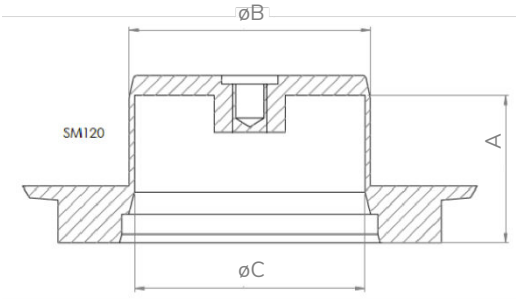

Type A

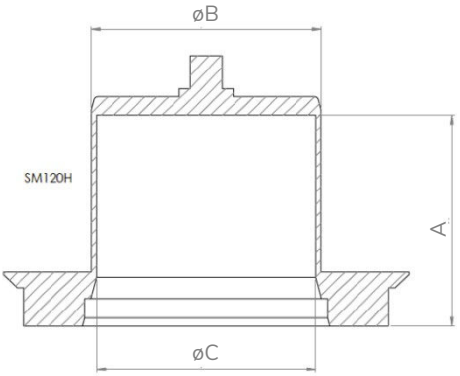

Type B

Additional Information

Please provide additional information to help us identify the best solution for your requirements.

As much information as possible is desired, but not all fields are mandatory.

Metenova®
A REPLIGEN® BRAND

Repligen Sweden AB
Norra Ågatan 32
SE-43135 Mölndal, Sweden
Phone +46(0)31 335 95 00
www.metenova.com
info.metenova@repligen.com

The information in this publication is subject to change without prior notice. The information in this document is believed to be complete and accurate at the time of publication. Repligen assumes no responsibility for any errors that may appear in this document. Customer is responsible for determining Repligen's product will perform suitable in the intended application.