Truelev

Tank Plate Flanged

Low Shear Applications

The revolutionary Truelev with its bearing-less fully levitating technology is perfect for shear sensitive products. This product is our high-end mixer that offers a unique control and measuring capability.

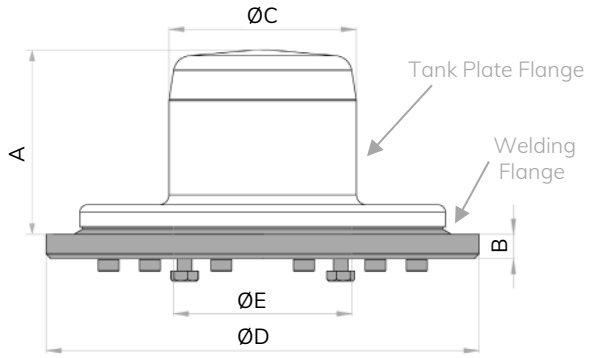



Measurements

Mixer model	A mm (in)	B mm (in)	ØC mm (in)	ØD mm (in) Welding Diameter	ØE mm (in)	Weight kg (lb)
ZF100	75 (2.95)	10 (0.39)	76.4 (3.01)	176.5 (6.95)	72.8 (2.87)	2.0 (4.41)
ZF160	124.5 (4.90)	16 (0.63)	121.6 (4.79)	263 (10.35)	117.8 (4.64)	11.3 (24.91)

General Information

Material	Stainless Steel ASME TP 316L acc. to SA-479 & EN 1.4435 acc. to EN 10272 (Other materials are available upon request)
Inspection Certificate	EN 10204 Type 3.1
O-rings	EPDM; FDA CFR21 §177.2600 & USP class VI
Surface Roughness	Ra ≤ 0.38 µm (15 µin)
Surface Treatment Tank plate	Electropolished. Non animal origin polishing compounds are used.
Surface Treatment Welding Flange	Manually polished. Non animal origin polishing compounds are used.
Operating Temperature	5°C - 150°C (41°F - 302°F)
Design Pressure	-1 – 10 barg (-14.5 – 145 psig)
Operating Pressure	-1 – 7 barg (-14.5 – 101.5 psig)
Packing and Marking	Items are individually packed and for traceability purposes marked with item & id no.
Quality Assurance	Metenova Quality Assurance system ensures the quality and traceability at all stages of the process.

Mete Nova

A REPLIGEN COMPANY

Components

Mixer Model	Tank Plate Flange Article Number	Welding Flange Article Number
ZF100	ZF12504-A04246	ZG23601-A01709
ZF160	ZF16504-A04233	ZG14601-A04234

Options

Mixer model	Option 1
ZF100	ZG00011-03363 (O-ring ORE 139,29x3,53 EPDM FDA USPVI)
ZF160	ZG00011-04235 (O-ring ORE 234,54x3,53 EPDM FDA USPVI)

Metenova AB
Norra Ågatan 32, SE-43135
Mölndal, Sweden
Phone +46(0)31 3359500
www.metenova.com
info@metenova.com

Metenova America INC
P.O Box 398
Glen Gardner, NJ 08826
USA
Phone +1(908)537 4199
info@metenova.com

The information in this publication is subject to change without prior notice. The information in this document is believed to be complete and accurate at the time of publication. Metenova assumes no responsibility for any errors that may appear in this document.
Customer is responsible for determining Metenova's product will perform suitable in the intended application