Truelev

Tank Plate Welded

Low Shear Applications

The revolutionary Truelev with its bearing-less fully levitating technology is perfect for shear sensitive products. This product is our high-end mixer that offers a unique control and measuring capability.

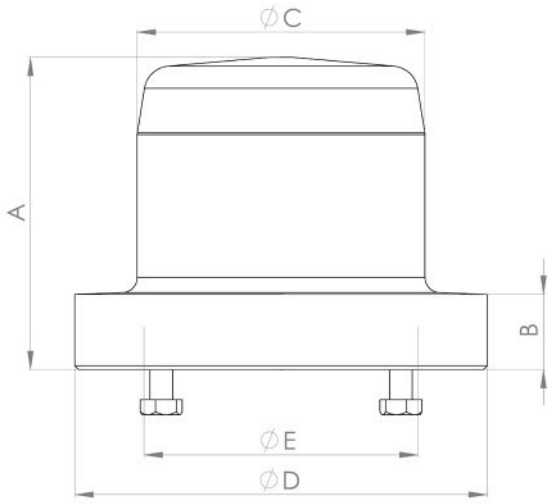



Measurements

Mixer model	Article Number	A mm (in)	B mm (in)	ØC mm (in)	ØD mm (in)	ØE mm (in)	Weight kg (lb)
ZF100	ZF12506-A03432	83 (3.27)	20 (0.79)	76.4 (3.01)	109.5 (4.31)	72.8 (2.87)	1.2 (2.7)
ZF160	ZF16506-A03304	132.5 (5.22)	45 (1.77)	121.6 (4.79)	168 (6.61)	117.8 (4.64)	5.2 (11.5)

General information

Material	Stainless Steel ASME TP 316L acc. to SA-479 & EN 1.4435 acc. to EN 10272 (Other materials are available upon request)
Inspection Certificate	EN 10204 Type 3.1
Surface Roughness	Ra ≤ 0.38 µm (15 µin)
Surface Treatment	Manually polished. Non animal origin polishing compounds are used.
Operating Temperature	5°C – 135°C (41°F – 275°F)
Design Pressure	-1 – 10 barg (-14.5 – 145 psig)
Operating Pressure	-1 – 7 barg (-14.5 – 101.5 psig)
Packing and Marking	Items are individually packed and for traceability purposes marked with item & id no.
Quality Assurance	Metenova Quality Assurance system ensures the quality and traceability at all stages of the process.

Metenova

A REPLIGEN COMPANY

Mete Nova

A **REPLIGEN** COMPANY

Metenova AB
Norra Ågatan 32, SE-43135
Mölndal, Sweden
Phone +46(0)31 3359500
www.metenova.com
info@metenova.com

Metenova America INC
P.O Box 398
Glen Gardner, NJ 08826
USA
Phone +1(908)537 4199
info@metenova.com

The information in this publication is subject to change without prior notice. The information in this document is believed to be complete and accurate at the time of publication. Metenova assumes no responsibility for any errors that may appear in this document.
Customer is responsible for determining Metenova's product will perform suitable in the intended application