Low Shear Applications



Truelev

Free Floating Magnetic Mixer

The Truelev Mixer is an astonishing breakthrough in engineering, eliminating all known flaws of previous mixer designs in one giant technological leap!
The revolutionary Truelev with its bearing-less fully levitating technology is perfect for shear sensitive products. This product is our high-end mixer that offers a unique control and measuring capability that can be leveraged in all tanks, final drug substance holding tanks or bioreactors.

Basic Selection

	ZF100/ZFM100	ZF160/ZFM160
Max Volume at 1 cP [ltr]	250	3000
Max Speed [rpm]	350	350

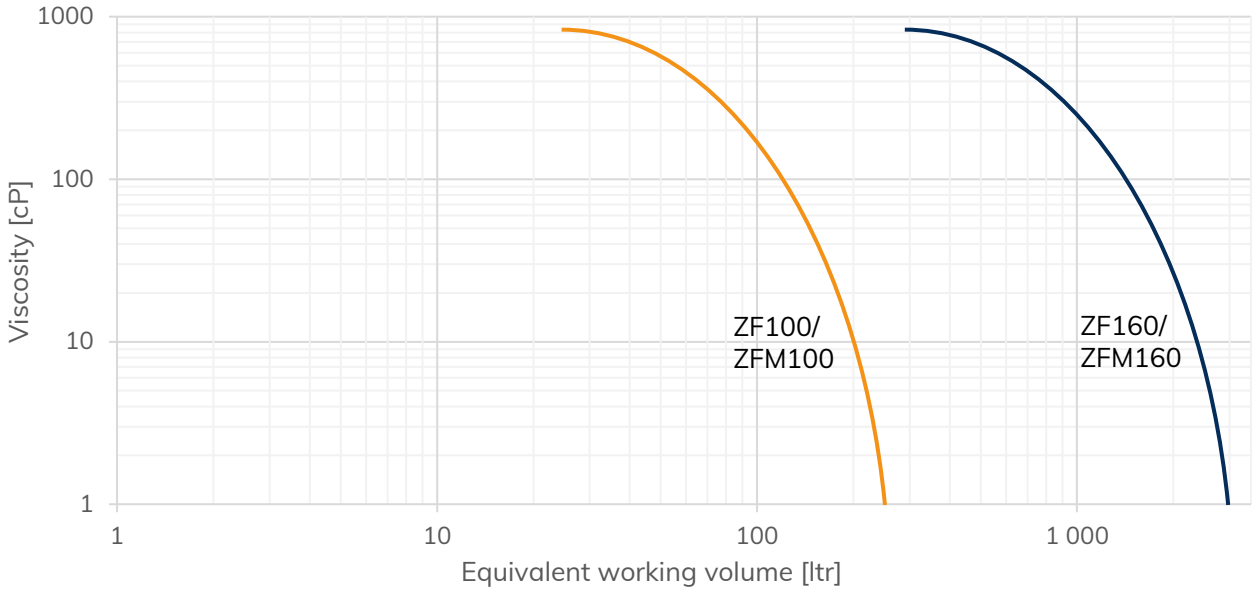

The information in this publication is subject to change without prior notice. The information in this document is believed to be complete and accurate at the time of publication. Metenova assumes no responsibility for any errors that may appear in this document. Customer is responsible for determining Metenova's product will perform suitable in the intended application

Mete Nova
A REPLIGEN COMPANY

Metenova AB
Norra Ågatan 32, SE-43135
Mölndal, Sweden
Phone +46(0)31 3359500
www.metenova.com
info@metenova.com

Metenova America INC
P.O Box 398
Glen Gardner, NJ 08826
USA
Phone +1(908)537 4199
info@metenova.com

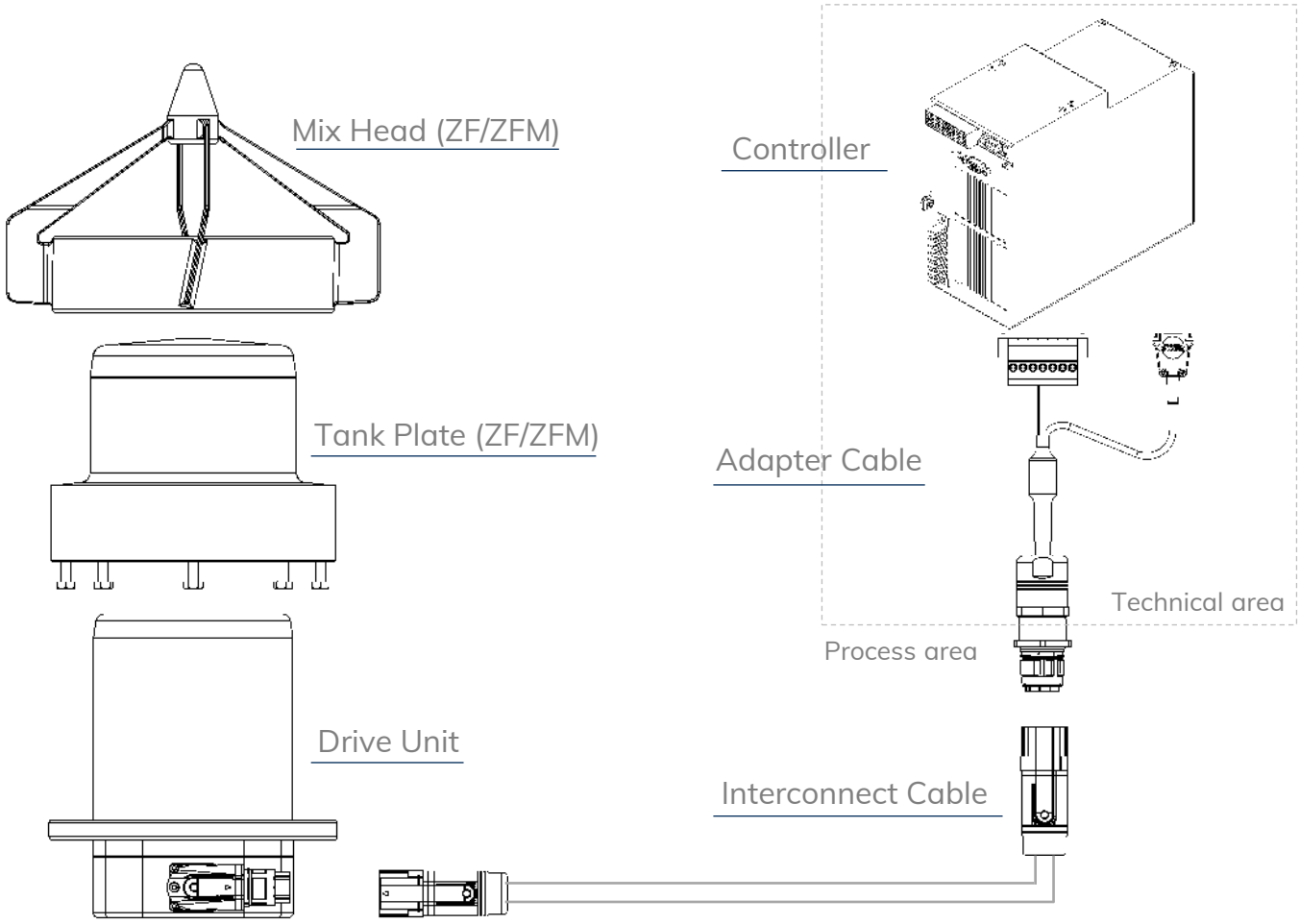

General guide for components detail specification datasheet

(More variation options available for each subcomponent)

Mixer Model	*Mix Head*	*Tank Plate*	*Drive Unit*	*Controller*
ZF100/ ZF160	DS-038	DS-039 (Welded) DS-040 (Flanged)	DS-041	DS-042
ZFM100/ ZFM160	DS-057	DS-058 (Flanged) DS-059 (Welded)	DS-041	DS-042

Net Weight (approximate)

Mixer Model	ZF100/ZFM100	ZF160/ZFM160
Weight kg (lb)	5 (11)	14 (31)

Additional Information

Operating Temperature	5°C - 135°C (41°F - 275°F)
Environment Temperature	0°C - 40°C (32°F - 104°F)
Operating Pressure	-1 – 7 barg (-14.5 – 101.5 psig)
Surface Roughness	Ra ≤ 0.38 µm (15 µin)
Surface Treatment	Electropolished. Non animal origin polishing compounds are used.
Product Contact Material	Stainless Steel ASME TP 316L acc. to SA-479 & EN 1.4435 acc. to EN 10272 (Other materials are available upon request)

Mete Nova

A REPLIGEN COMPANY

Metenova AB
Norra Ågatan 32, SE-43135
Mölndal, Sweden
Phone +46(0)31 3359500
www.metenova.com
info@metenova.com

Metenova America INC
P.O Box 398
Glen Gardner, NJ 08826
USA
Phone +1(908)537 4199
info@metenova.com

The information in this publication is subject to change without prior notice. The information in this document is believed to be complete and accurate at the time of publication. Metenova assumes no responsibility for any errors that may appear in this document. Customer is responsible for determining Metenova's product will perform suitable in the intended application.