# Truelev

## Drive Unit

Low Shear Applications

The revolutionary Truelev with its bearing-less fully levitating technology is perfect for shear sensitive products. This product is our high-end mixer that offers a unique control and measuring capability.

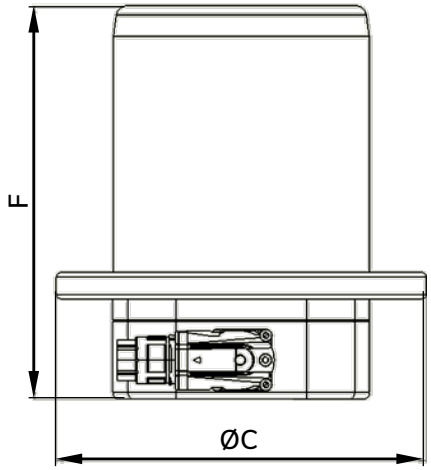




### Measurements

| Mixer Model | Article Number | ØC mm (in) | F mm (in) | Weight kg (lb) |
|---|---|---|---|---|
| ZF100 / ZFM100 | ZF12502-03888 | 110 (4.3) | 125 (4.9) | 1.8 (4.0) |
| ZF160 / ZFM160 | ZF16502-02434 | 170 (6.7) | 180 (7.1) | 5.4 (11.9) |

### General information

| Mixer model | ZF100 / ZFM100 | ZF160 / ZFM160 |
|---|---|---|
| Motor | 0.35 kW | 0.875 kW |
| Voltage | Power supplied by controller unit | |
| Certified for Incorporation | CE | |
| Protection Class | IP67 | |
| Operating temperature inside tank | 0°C – 90°C (32°F – 194°F) | |
| Operating temperature inside tank during sterilization @ 0 rpm | 0°C – 135°C (32°F – 275°F) | |
| Environment temperature | 0°C – 40°C (32°F – 104°F) | |
| Max speed for mixer | 350 rpm | |
| Blocked speed range, ZF | 65 – 85 rpm | 70 – 90 rpm |
| Blocked speed range, ZFM | 60 – 80 rpm | 70 – 90 rpm |
| Packing and Marking | Items are individually packed and for traceability purposes marked with item & id no | |
| Quality Assurance | Metenova Quality Assurance system ensures the quality and traceability at all stages of the process | |



Metenova

A REPLIGEN COMPANY

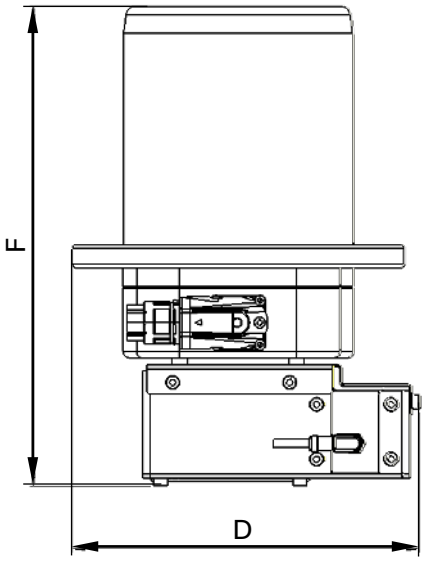


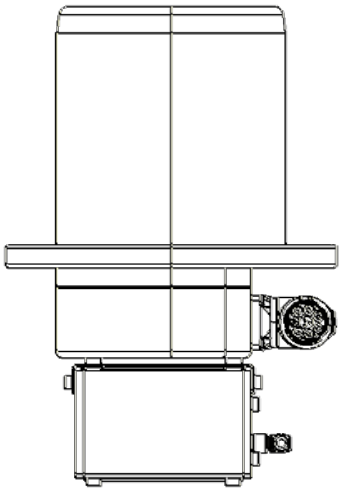



## Option: Drive Unit with Forced Cooling

| Article number | Description |
|---|---|
| ZF12502-05110 | ZF100 / ZFM100 Drive Unit with Forced Cooling |
| ZF16502-05111 | ZF160 / ZFM160 Drive Unit with Forced Cooling |

## Dimensions

| Article number | D mm (in) | F mm (in) | Weight kg (lb) |
|---|---|---|---|
| ZF12502-05110 | 139 (5.5) | 192 (7.6) | 2.6 (5.7) |
| ZF16502-05111 | 178 (7.0) | 246 (9.7) | 6.4 (14.1) |

## General information valid for forced cooling components

| Article number | ZF12502-05110 | ZF16502-05111 |
|---|---|---|
| Voltage | 24 VDC | |
| Power consumption | Max 12 W | |
| Connection | 2 wire | |
| Certified for Incorporation (Forced cooling) | All components are compliant to C-UL-US. In North America to be approved for installation on site, by the “local authority having jurisdiction” (AHJ) | |
| Protection class | IP66 | |
| Cable Length | 5 meters | |



Mete Nova
A REPLIGEN COMPANY

Metenova AB
Norra Ågatan 32, SE-43135
Mölndal, Sweden
Phone +46(0)31 3359500
www.metenova.com
info@metenova.com

Metenova America INC
P.O Box 398
Glen Gardner, NJ 08826
USA
Phone +1(908)537 4199
info@metenova.com

The information in this publication is subject to change without prior notice. The information in this document is believed to be complete and accurate at the time of publication. Metenova assumes no responsibility for any errors that may appear in this document.
Customer is responsible for determining Metenova’s product will perform suitable in the intended application